LITHIUM BATTERY

LFP1233

LEOCH BATTERY

Features Of LiFePO4 Battery

- Ultra light weight
- High integration, small size, high energy density
- Eco-friendly clean energy
- Long lifespan sustainable
- High efficiency

Application Scenarios

- Electric vehicles, Electric mobility
- Solar/wind energy storage system
- Telecommunication
- Medical equipment
- Lighting

Specification

Nominal Voltage		12.8V
Working Voltage		10-14.6V
Nominal Capacity		33Ah
Energy		422.4Wh
Positive Material		LFP
Approx. Weight		4kg
Dimension	Length	175mm
	Width	166mm
	Container Height	125mm
Terminal Type		M6
Container Material		ABS
IP Rating		IP65
Temp. Range	Charge	0-55℃
	Discharge	-20~60℃
	Storage	-20~60℃
Recom. Temp. Range	Charge	15-35℃
	Discharge	15-35℃
	Storage	-10~35℃
Cycle Number		5000 cycles
Self Discharge		≤3% Per Month
Max.number of series and parallel connections		4S or 4P

Charge

Max Continuous Charge Current	30.0A
Recom. Charge Current	6.0A
Upper Limit Voltage	14.6V

DisCharge

Max Continuous Discharge Current	30.0A
Recom. Discharge Current	15.0A
Lower Limit Voltage	10V

Additional Function

/

Physical Dimension-mm

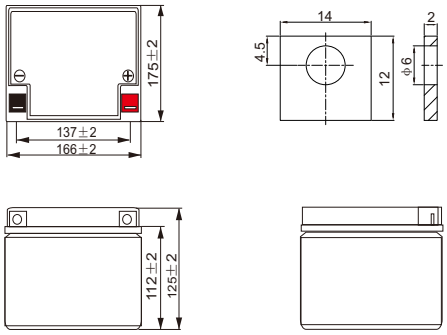

Data above is recommended and the picture is only for battery effect display, Leoch reserve the final right of explanation.
© LEOCH. All rights reserved.Trademarks and logos are the property of LEOCH and its affiliates unless otherwise noted.Subject to revisions without prior notice. E&OE.

Publication No:LFELI-1233T-C-EN-V1.0-202507

E-mail: info.lithium@leoch.com
www.leoch.com